Astrobee Guest Science

ISS R+D Conference 07/16/2016

Outline

- Astrobee Overview
- Astrobee Interface
- Astrobee Development Tools

Astrobee Overview

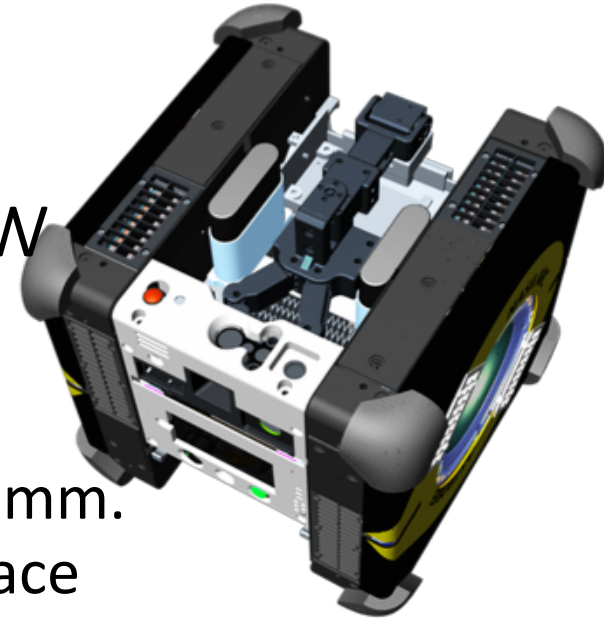

- A total of 3 units on board ISS
- Docking station for recharge and wired comm.
- Built in perching arm using payload interface
- 6 total cameras for various purposes, including one cellphone class HD camera.
- Main purposes:
  - Host guest science payload (GSP payloads)
  - Serve as mobile camera for ISS situational awareness
  - Serve as mobile sensor platform for
- First GSP Payloads
  - REALM RFID reader
  - Zero Robotics High School and Middle School competitions

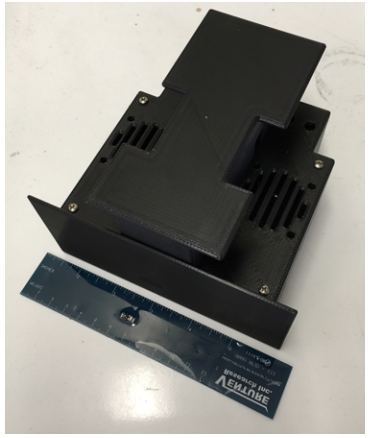

Interface - Processors

- Three main internal processors
  - High-Level Processor (HLP)
    - Snapdragon 805 Quad-Core SOM
    - Mostly reserved for GSP payload use
    - Runs touch screen and
  - Mid-Level Processor (MLP)
    - Snapdragon 805 Quad-Core SOM
    - Lower rate, higher computation processes
    - Runs most of the core robot software
    - Handles decision making and data communication
  - Low-Level Processor (LLP)
    - Wandboard dual
    - High rate control loop and sensor sampling
    - Pseudo-real time

Interface - Attachment

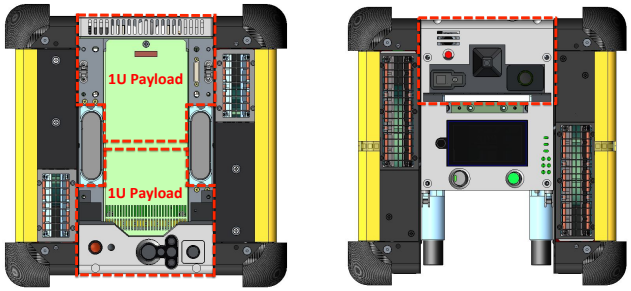

(a) Top (b) Front

- Available volume:
  - 12.32 cm by 15.24 cm by 10.16 cm
  - Keep outs provided via CAD model
  - Payloads may extend beyond the exterior of robot
  - Payloads within payload volume use built-in bumpers for impact protection
- Alignment pins
- No-tool quick-release levers attachment system
- Four #8-32 bolt pattern for each GSP payload bay

Interface - Electrical

- Connector:
  - Astrobee side: Glenair M83513/03-E03N
  - Payload side: Glenair M83513/04-E03N
- Power:
  - 14.4 V 3A unregulated
- Data:
  - USB to HLP and MLP

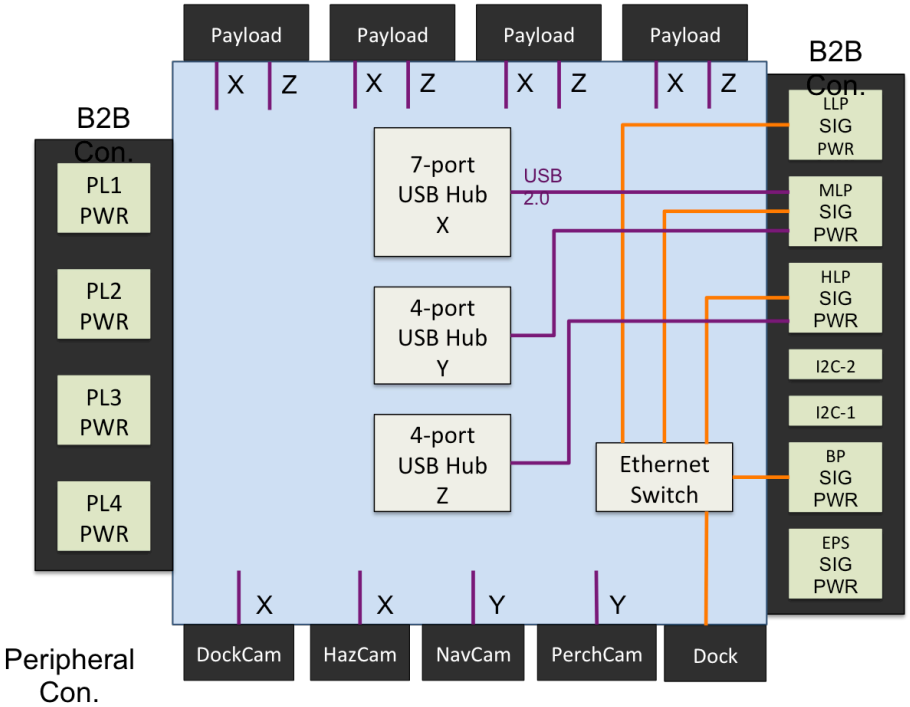

Interface - Propulsion

- Two (2) propulsion modules
- Able to instantaneously thrust in any direction and torque about any axis
- Acceleration dependent on weight of GSP payload, but designed to be up to:
  - 10 cm/s^2 linear
  - 30deg/s^2 angular
- Maximum thrust: 600mN

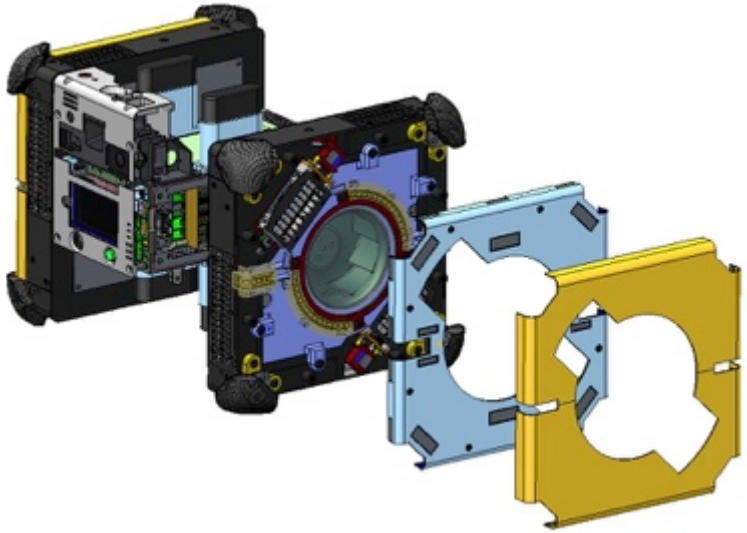

Interface - Human

- Touch Screen
- RGB signal lights
- Laser pointer
- Speaker
- Microphone

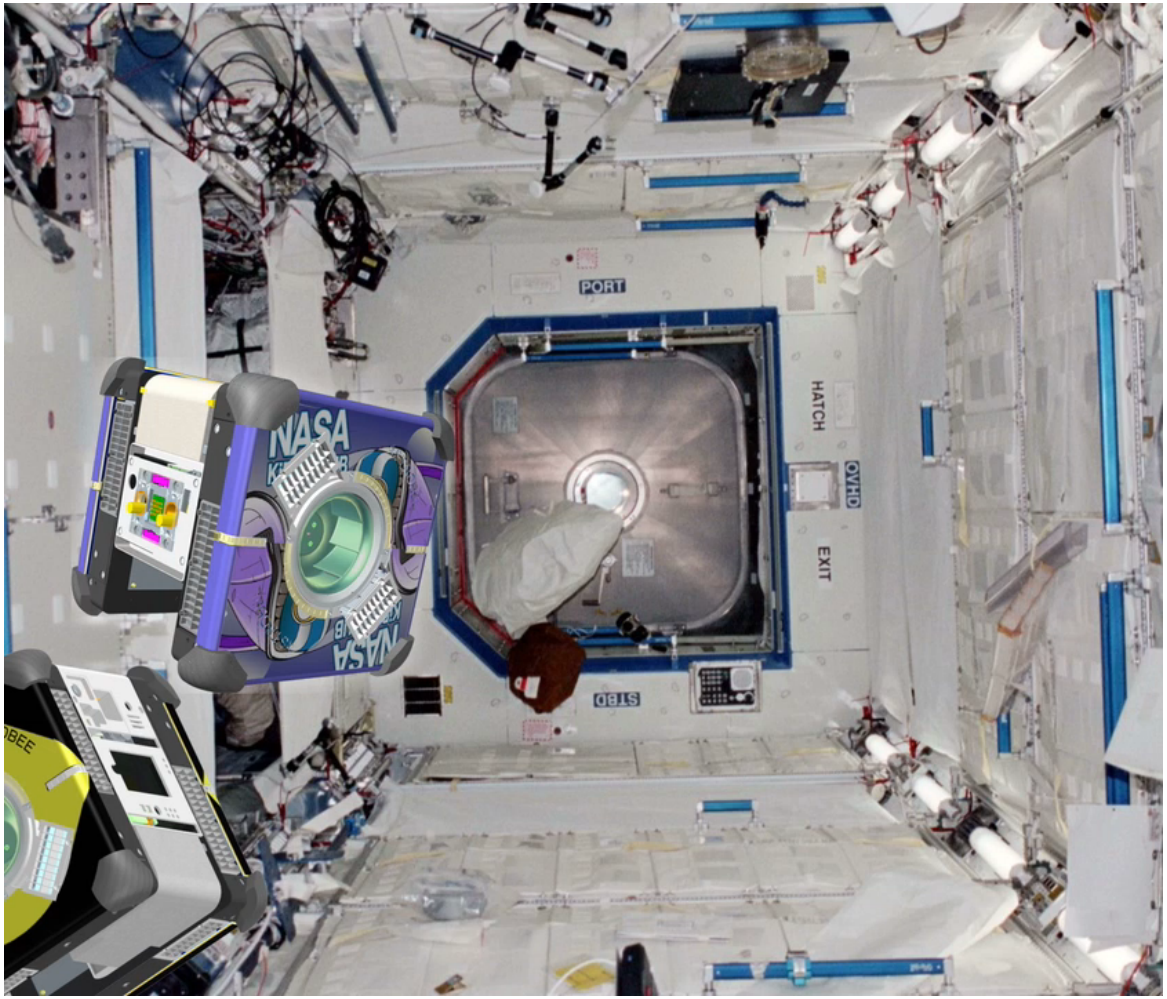

Interface - Software

- GSP payloads communicate to Astrobee via the Guest Science Android ROS bridge
- A JAR library will facilitate GSP payload software.
- GSP payloads subscribe to any Astrobee message.
- Advanced users may access lower level functionality.

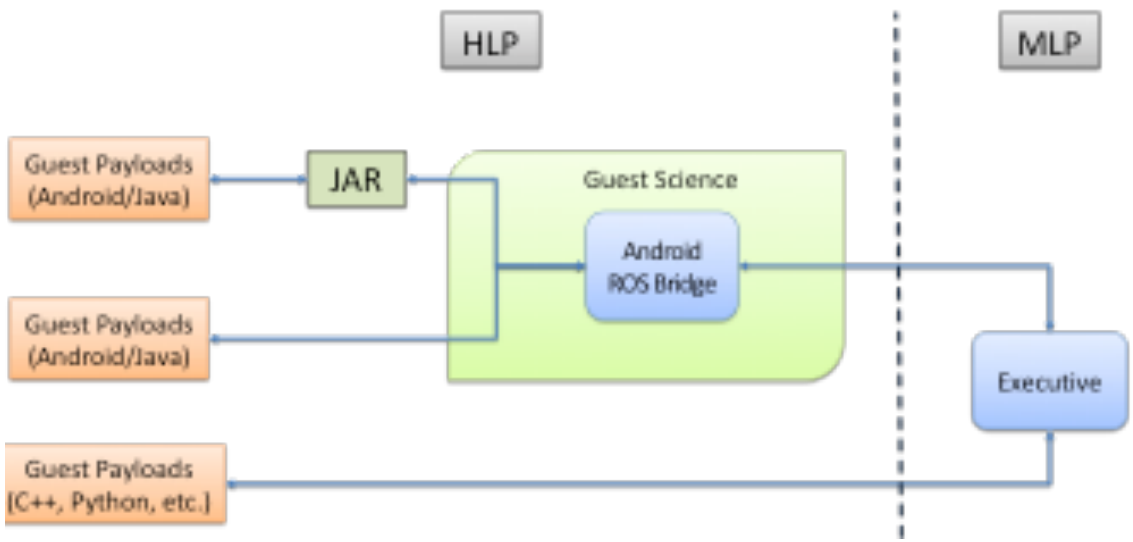

Interface - Ground

- Easy operator interface
- Custom data message for GSP Payload
- Start, stop and send custom commands to GSP payload

Development - Simulator

- Runs actual flight software
- Simulate sensor inputs
- Runs actual GSP Payload code

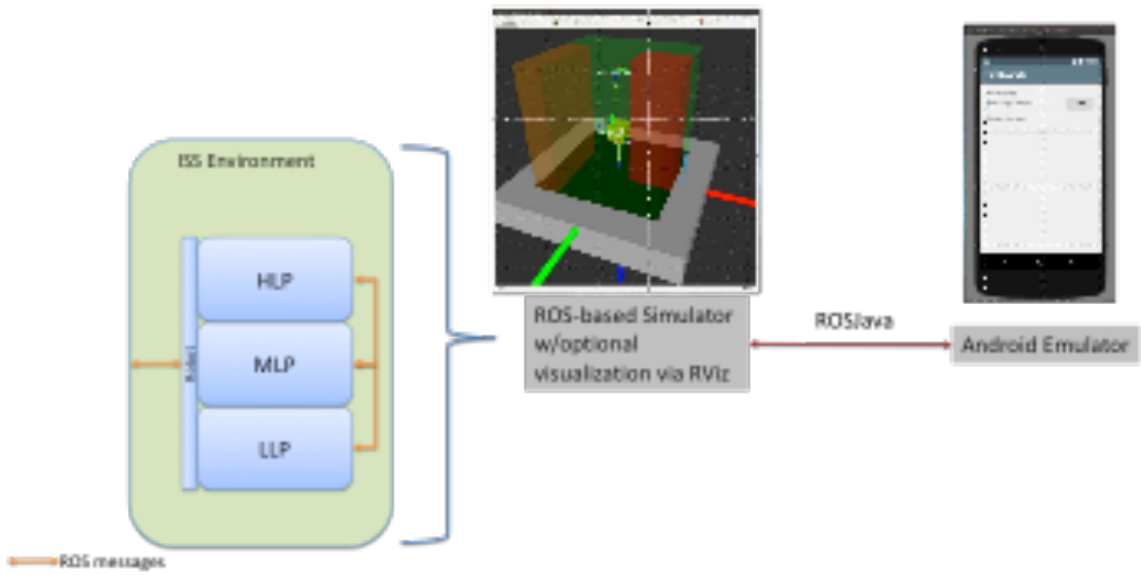

Development – Payload Tester

- Main purpose to test payload port functionality and demonstrate GSP payload development path.
- External processor capable of running Linux and Core Flight Software.
- Trade study underway to select alternative attachment options, including seat track.