Integrated Resilient Aircraft Control

Kalmanje Krishnakumar, Nhan Nguyen, John Kaneshige
NASA Ames Research Center, Moffett Field, CA, USA

Keywords: Flight Control, Adaptive Control, Integrated Flight and Propulsion Control, Flight Planning and Guidance, Aviation Safety, Automatic Control, Intelligent Trajectory Guidance, Engine Response, Maneuvering Envelope

Abstract: Stability, maneuverability, and safe landing in the presence of adverse conditions need an integrated approach for addressing various flight control aspects of resilient aircraft control. Adverse events include loss of control caused by environmental factors, actuator and sensor faults or failures, and expand toward more complicated damage conditions. In this article, the application focus of the technologies presented is for current and next generation subsonic civil transports. However, a majority of the challenges addressed by these technologies are general in nature, and therefore, the solutions will apply to a large class of aviation vehicles. The article first defines the flight control architecture that integrates various aspects of flight and propulsion control and a discussion on the technical challenges associated with resilient aircraft control are presented. The flight control technologies specifically addressed for resiliency include inner-loop adaptive control, integrated flight and propulsion control, and outer-loop intelligent guidance and planning.

1. INTRODUCTION

Stability, maneuverability, and safe landing in the presence of adverse conditions need an integrated approach for addressing various flight control aspects of resilient aircraft control. Adverse events include loss of control caused by environmental factors, actuator and sensor faults or failures, and expand toward more complicated damage conditions. The application focus of the technologies presented is for current and next generation subsonic civil transports. However, a majority of the challenges addressed by these technologies are general in nature, and therefore, the solutions will apply to a large class of aviation vehicles. The flight control technologies specifically addressed for resiliency include inner-loop adaptive control, integrated flight and propulsion control, and outer-loop intelligent guidance and planning. These ideas are expanded further in sections 3 and 4.

Integrated Resilient Aircraft Control (IRAC) technologies will have a direct impact on adverse conditions associated with vehicle impairment due to damage, failures, and upsets in the following ways:

1. For subsonic civil transport aircraft, which have built-in control redundancy, resilient control will provide stable flight in the midst of an adverse event. In addition to providing stability, intelligent flight planning and guidance will enable the pilot to maneuver the aircraft to safe landing within constraints dictated by the adverse event.
2. For next generation aircraft, such as blended wing designs and tail-less configurations, in addition to safe response to adverse events, adaptive control will be an enabler for optimum performance throughout the flight envelope. Also, adaptive control along with

intelligent planning and guidance will provide an excellent way to test designs without excessive avionics cost associated with new control-law developments.

The outline for the rest of the article is as follows: first we define the flight control architecture that integrates various aspects of flight and propulsion control; next we present the technical challenges associated with resilient aircraft control; the final section presents the technical solutions that address some of these challenges.

2. IRAC ARCHITECTURE

To achieve safe flight in the presence of adverse events, both inner-loop (stabilizing) and outer-loop (path management) functionalities have to respond in a manner consistent with the constraints posed by the adverse events. The ultimate goal of the pilot in such situations is to land the airplane safely as soon as possible. The control architecture presented in Figure 1 captures the technologies proposed for resilient flight control.

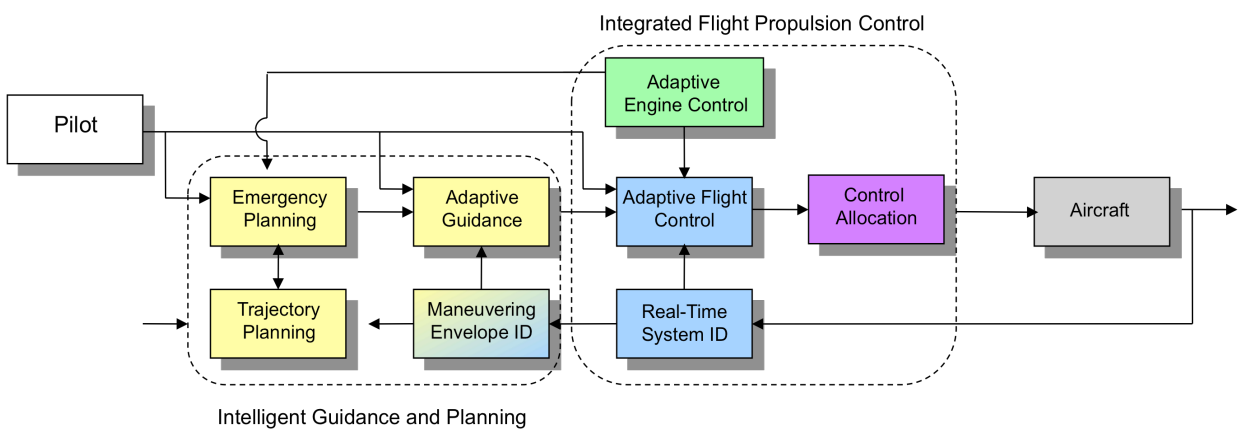

Figure 1. Resilient Flight Control Architecture

3. IRAC TECHNICAL CHALLENGES

The goal of IRAC is to arrive at a set of validated multidisciplinary integrated aircraft control design tools and techniques for enabling safe flight in the presence of adverse conditions (ex: faults, damage and/or upsets). In a general sense, a control design for an adverse event can be stated as:

Given the airplane system,

$$\dot{x}(t) = f(x(t), u(t), \eta(\theta(t), \Delta(t), t), t) \tag{1a}$$

the flight and engine controller need to arrive at a control, *u(t)* such that the system (in the order of priority): is locally stable, follows closely the desired trajectories (includes handling quality of

the system), and reacts to changing environments by properly adapting the guidance and planning functionality.

In Equation (1), x is the state vector, u is the control vector, and $\eta(t) = \eta(\theta(t), \Delta(t), t)$ is the unknown change caused by the adverse event. The change could be both parametric uncertainties *(θ(t))* that could be updated in real-time via system identification and/or unmodeled uncertainties (*Δ(t)*), with $\mu = \sup\|\Delta(t)\|$ as the upper bound of the unmodeled uncertainties *Δ(t)*.

The control *u(t)* can be further broken down into its subcomponents as follows:

$$u(t) = g(u_0(x(t),t), u_{ad}(w(t), \mu, x(t), \delta(t), \Gamma), u_c(\theta(t), x(t), x_g(t), p(t), t) \tag{1b}$$

Where

- $u_0(t)$ = Nominal control
- $u_{ad}(t)$ = Adaptive inner-loop control
- $u_c(t)$ = Commanded outer-loop control
- *w(t)* = Control parameter vector that is adapted
- *δ(t)* = Vector of commanded signals such as for trajectory management
- Γ = represents adaptation gains and filter parameters
- $x_g(t)$ = Trajectory guidance function
- *p(t)* = Emergency planning function

The flight control focus is on arriving at $u_{ad}(t)$ and $u_c(t)$ for handling a myriad of adverse events. To do this successfully, we need advances in both inner-loop and outer-loop control methodologies that exhibit inherent capability to be resilient. Next we address the challenges associated with three such technologies.

3.1. Adaptive Flight Control

Recent adaptive control approaches have shown great promise in handling certain classes of adverse conditions [1-3]. Uncertainty due to an adverse event is a function of both model-parametric uncertainty and unmodeled uncertainty. For example, uncertainties in C_L, C_D, etc will fall under the first category. These uncertainties can be represented by the set $H(\theta, \lambda)$, where θ is the parametric space and λ denotes bounds on this uncertainty (spherical, rectangular, etc.). Good flight dynamic models will provide an estimate for the set $H(\theta, \lambda)$ and adaptive control laws that will accommodate these uncertainties can be derived. This problem is complicated by the presence of unmodeled uncertainty. For the uncertainty vector *η(θ(t), Δ(t),t)*, the relationship between the geometry of $H(\theta, \lambda)$, characterization of μ, and bounds on *Δ(t)* is a foundational research topic. The current approaches for adaptive control do not provide a precise characterization of μ that can in turn be related to preferred stability and performance margins. There have been some preliminary results in relating the adaptive controller free parameters to an optimal μ value [4-5]. In addition to this important issue of relating the uncertainty magnitude to

achievable stability metrics, there are several complex issues related to implementation of adaptive control that need to be addressed: These include: (1) adaptive control in the presence of static and dynamic saturation; (2) cross-coupling between longitudinal and lateral axes due to failures, damage, and varying time constants for adaptation; (3) on-line reconfiguration, especially achieving attitude control using propulsive forces and moments; and (4) adaptive control theory that can effectively address inherently nonlinear systems as well as effectively the issues of time-scale separation which is important for systems with different time latency such as engines.

Another challenge is to arrive at suitable metrics for stability and performance for both modeled and unmodeled uncertainties. The research will require concepts from linear and nonlinear systems theory, Lyapunov methods, and robust control theory. These metrics will be useful in evaluating and comparing adaptive controllers and adaptive control approaches.

3.2. Integrated Flight and Propulsion Control

Aircraft directional stability is provided by the vertical stabilizer. When this aerodynamic surface is damaged and becomes separated, an aircraft will become directionally unstable. This was a causal factor for the American Flight 587 fatal accident in 2001 [6]. There are instances in aviation history of aircraft surviving by using engines as flight path control effectors. The recent example is the DHL A300 cargo flight over Baghdad [7].

These accidents and incidents showcase the potential of using aircraft engines to regain aircraft stability in an existing flight control system. As a control actuator, aircraft engines are generally slower than the traditional control surface actuators. The response time of a typical aircraft engine can be characterized by the engine lag time and the engine time constant. Since the transient dynamics upon the loss of a vertical stabilizer can be rapid, aircraft engines may not be able to respond quickly to changes in aircraft states in order to regain aircraft stability.

Using differential thrust as an emergency substitute for failed control surfaces has been a research topic after the development of Propulsion-controlled aircraft (PCA) system at NASA, which was first evaluated on a piloted B-720 simulation [8]. The objective of the PCA system is to provide a necessary thrust command for each engine for emergency flight control in response to pilot's flight path input, assuming that each engine can be controlled individually. In all these cases the engine dynamics are ignored, despite the fact that the engine response has a significant lag, especially in low thrust levels.

3.3. Intelligent Trajectory Guidance and Planning

Intelligent guidance and planning focuses on generating $x_g(t)$ and $p(t)$ in real-time such that safe landing can be achieved via pilot-in-the-loop control. Some of the tools to assist pilots in safely landing a damaged aircraft include: (1) automated planning techniques that can assist pilots in generating, evaluating, and choosing a flight path to an emergency landing site; (2) trajectory planning algorithms that can accommodate off-nominal constraints placed on aircraft maneuverability and control; and (3) a guidance system architecture that can work with (inner-loop) adaptive controllers to provide (outer-loop) autopilot control and flight director guidance,

while operating within and exploring the stable and stabilizable regions of the maneuvering envelope under off-nominal conditions. Figure 2 presents a flight envelope example for a transport aircraft showing the stabilizable regions [25]. These envelopes can be computed a priori and some instances might have to be determined in real-time after the adverse event. This is another significant challenge for resilient flight control.

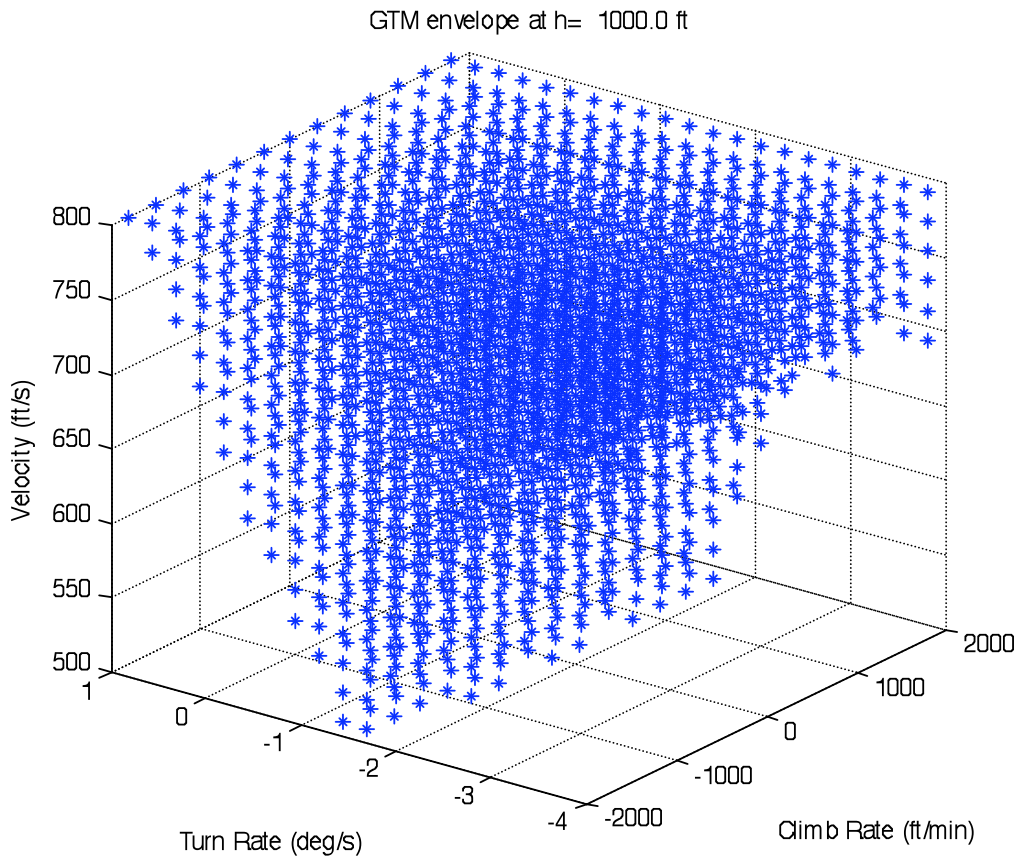

Figure 2. Maneuvering Envelope [25]

The concept is to have these technologies working together, along with adaptive flight and integrated propulsion control, to assist the pilot in achieving a safe landing under degraded aircraft conditions (Figure 3). For example, if an aircraft were to incur damage and/or failures, adaptive flight control and/or integrated propulsion control technologies would be utilized to stabilize the aircraft and compensate for the resulting aerodynamic changes. Maneuvering envelope identification algorithms would be used to identify the boundaries of the remaining maneuvering envelope, while working with the adaptive guidance system to navigate within and explore (as necessary) the maneuvering envelope. Trajectory planning algorithms would generate robust flyable trajectories that comply with the maneuvering envelope constraints. These trajectories would then be used by automated planning techniques to construct a prioritized list of flight plan options to potential landing sites. Finally, the adaptive guidance

system would provide (outer-loop) autopilot control and/or flight director guidance to assist the pilot in following the desired trajectory.

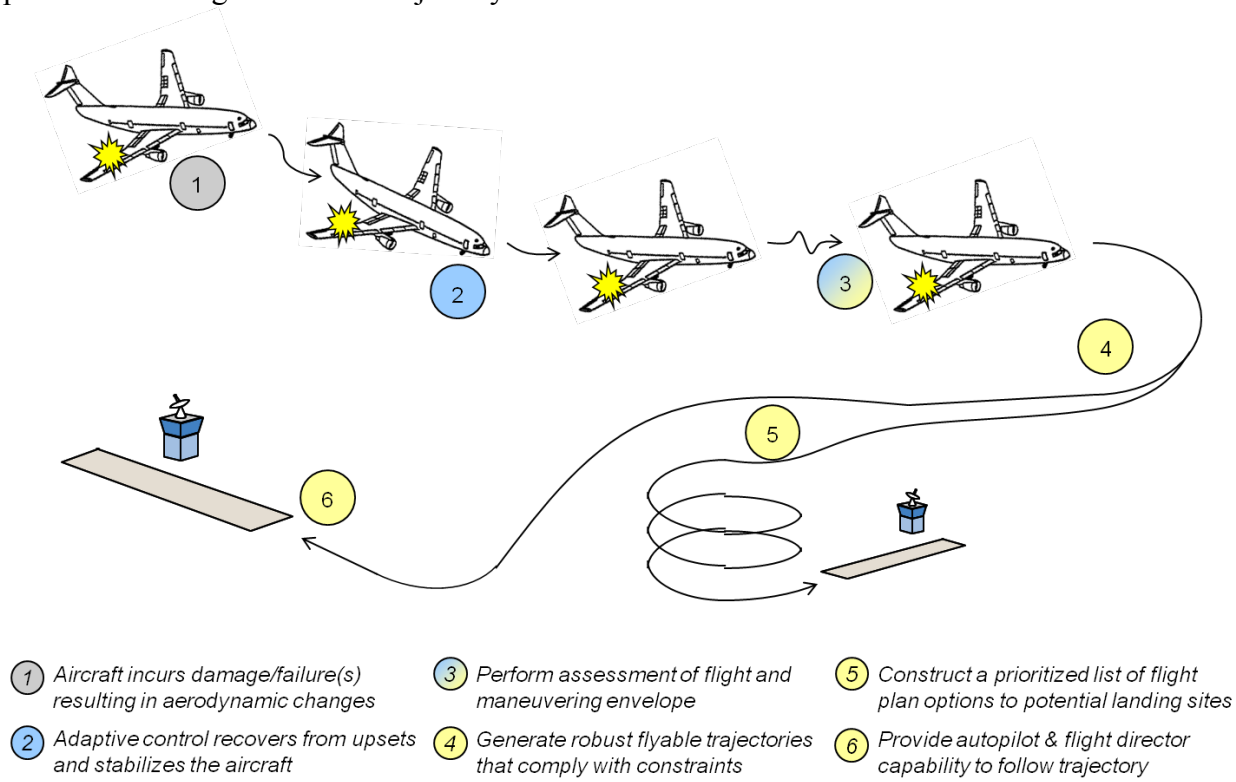

Figure 3. Example Scenario

4. TECHNICAL APPROACH

4.1. Adaptive Flight Control

4.1.1. Model-Reference Adaptive Control

Model-reference adaptive control (MRAC) is a potentially promising technology that can improve performance and stability of a conventional fixed-gain controller. In recent years, adaptive control has been receiving a significant amount of attention. NASA had recently conducted a flight test of a neural base adaptive flight control system on board a modified F-15 test aircraft [1]. The ability to accommodate system uncertainties and to improve fault tolerance of a control system is a major selling point of adaptive control since traditional gain-scheduling or fixed-gain control methods are viewed as being less capable of handling off-nominal operating conditions outside of a normal operating envelope.

The majority of MRAC methods may be classified as either direct or indirect. Indirect adaptive control methods are based on identification of unknown plant parameters using parameter identification techniques such as recursive least-squares and neural networks [9]. Direct adaptive control methods directly adjust control parameters to account for system uncertainties without

identifying unknown plant parameters explicitly. MRAC methods based on neural networks have been a topic of great research interest [2, 3, 10]. Rysdyk and Calise described a neural net direct adaptive control method for improving tracking performance [2].

A hybrid direct-indirect adaptive control is an approach that combines both direct and indirect adaptive control to provide a more effective and flexible adaptation strategy [3]. The indirect adaptive law will perform parameter estimation of the unknown plant model which will be used to update the computed output of a dynamic inversion controller. As a result, the control command will result in a smaller dynamic inversion error so that the effect of the direct adaptive controller can be reduced.

Figure 4 illustrates the hybrid adaptive flight control architecture that comprises: 1) a reference model that translates rate commands into desired acceleration commands, 2) a proportional-integral (PI) feedback control for rate stabilization and tracking, 3) a dynamic inversion controller that computes actuator commands to achieve desired acceleration commands, 4) a direct MRAC to augment the acceleration commands, and 5) an indirect adaptive control that updates the plant model for the dynamic inversion controller.

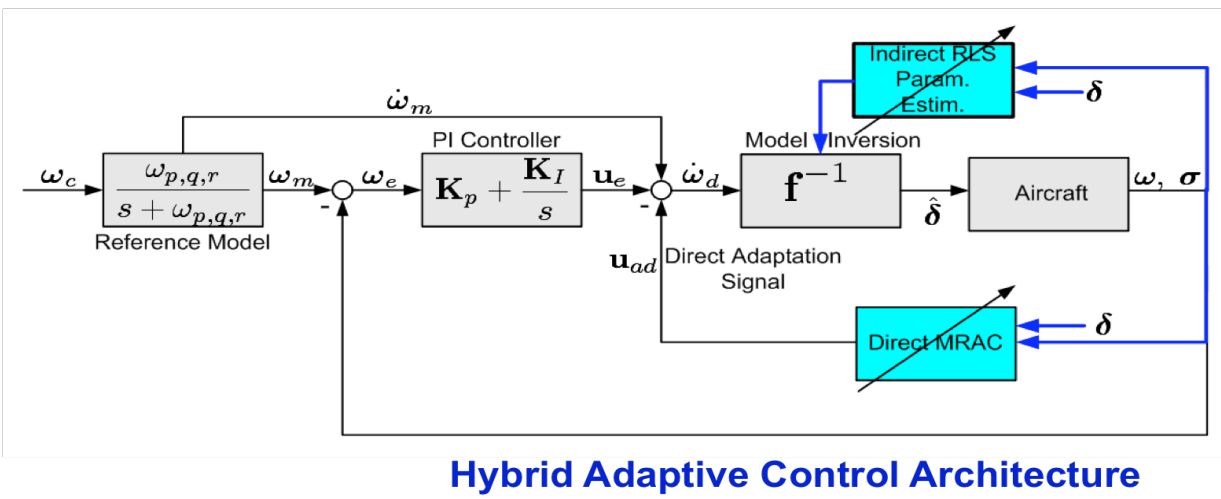

Hybrid Adaptive Control Architecture

Figure 4. Hybrid Adaptive Flight Control Architecture

Consider an aircraft model

$$\dot{x} = \left(A_1 + \Delta A_1\right)x + \left(A_2 + \Delta A_2\right)z + \left(B_1 + \Delta B_1\right)u + f\left(x, z\right) \tag{2a}$$

where

A_1, A_2, and B_1 are known;

ΔA_1, ΔA_2, and ΔB_1 are linear parametric uncertainty due to damage and/or failure;

$x = \begin{bmatrix} p & q & r \end{bmatrix}^T$ is the rate vector;

$z = \begin{bmatrix} \Delta\phi & \Delta\alpha & \Delta\beta & \Delta V & \Delta h & \Delta\theta \end{bmatrix}^T$ is the "outer-loop" state vector;
$u = \begin{bmatrix} \Delta\delta_a & \Delta\delta_e & \Delta\delta_r \end{bmatrix}^T$ is the control surface deflection vectors;
and $f(x)$ is a nonlinear parametric uncertainty which can be approximated by some suitable basis function $\beta(x,z)$ such as sigma-pi, sigmoidal, and radial basis function on a compact set in x as

$$f(x,z) = W^T \beta(x,z) + \varepsilon(x,z) \tag{2b}$$

where W is an unknown weight matrix and $\varepsilon(x,z)$ is a small approximation error.

A second-order reference model to provide desired handling qualities is specified as

$$\dot{x}_m = -K_p x_m - K_i \int_0^t x_m d\tau + B_m r \tag{3}$$

where

$K_p = \mathrm{diag}\left(2\zeta_p\omega_p, 2\zeta_q\omega_q, 2\zeta_r\omega_r\right)$ is the proportion gain matrix specified by the damping ratios ζ_p, ζ_q, and ζ_r;
$K_i = \mathrm{diag}\left(\omega_p^2, \omega_q^2, \omega_r^2\right)$ is the integral gain matrix; B_m is the pilot input gain matrix; and $r = \begin{bmatrix} \delta_{lat} & \delta_{lon} & \delta_{rud} \end{bmatrix}^T$ is the pilot input vector.

The dynamic inversion controller is designed to replace the plant model with the reference model by computing the actuator command u_c as

$$u_c = \left(B_1 + \Delta\hat{B}_1\right)^{-1}\left[-\left(K_p + \frac{K_i}{s}\right)x + B_m r - \left(A_1 + \Delta\hat{A}_1\right)x - \left(A_2 + \Delta\hat{A}_2\right)z - u_{ad}\right] \tag{4}$$

where $\Delta\hat{A}_1$, $\Delta\hat{A}_2$, and $\Delta\hat{B}$ are estimated by the indirect adaptive control and $u_{ad} = W^{\mathrm{T}}\beta(x,z)$ is the direct adaptive signal.

In the above equations, the control vector is limited to the control surface deflections and does not include the throttle as an actuator. Given our interest is in adaptive inner-loop control, throttle control is not fast enough to provide the enhanced stability needed for resilience. The requirements for faster throttle actuation and its implication on engine designs are not completely understood. Section 4.2 presents further discussion on integrated flight-propulsion control and faster engine response requirements for enhanced stability.

The weight matrix W is computed by a direct adaptive law with the e-modification scheme [11] to improve robustness as follows:

$$\dot{W} = -\Gamma\left(\beta e^{\mathrm{T}} PB + \mu \left\| e^{\mathrm{T}} PB \right\| W\right) \tag{5}$$

where $e = \left[\int_0^t (x_m - x)d\tau \quad (x_m - x)\right]^{\mathsf{T}}$ is the tracking error, $\Gamma > 0$ is an adaptive gain or learning rate, $\mu > 0$ is a tuning parameter, $B = \begin{bmatrix} 0 & I \end{bmatrix}^{\mathsf{T}}$, and $P = P^{\mathsf{T}} > 0$ is a positive-definite matrix that solves the following Lyapunov equation:

$$PA_m + A_m^{\mathsf{T}} P = -Q \tag{6}$$

where $Q = Q^{\mathsf{T}} > 0$ is a positive-definite matrix and

$$A_m = \begin{bmatrix} 0 & I \\ -K_i & -K_p \end{bmatrix} \tag{7}$$

The indirect adaptive law updates the plant model in the dynamic inversion controller by estimating $\Delta\hat{A}_1$, $\Delta\hat{A}_2$, and $\Delta\hat{B}$ according to

$$\begin{aligned} \Delta \dot{\hat{A}}_1 &= -\Gamma_x x e^{\mathsf{T}} PB \\ \Delta \dot{\hat{A}}_2 &= -\Gamma_z z e^{\mathsf{T}} PB \\ \Delta \dot{\hat{B}}_1 &= -\Gamma_u u e^{\mathsf{T}} PB \end{aligned} \tag{8}$$

where $\Gamma_x > 0$, $\Gamma_z > 0$, and $\Gamma_u > 0$ are corresponding learning rates, and the actuator output u is assumed to be available as an input to the indirect adaptive control. If not, then the actuator command u_c can be used, and the actuator command u_c can be shown to have a fixed point solution.

Other suitable parameter estimation methods can also be used in lieu of the indirect adaptive law [3].

The combination of both direct and indirect adaptive laws in the hybrid adaptive control architecture can provide a more effective adaptation strategy than either direct or indirect adaptive control alone. By choosing suitable adaptive gain and covariant matrices, the hybrid adaptive control allows the direct adaptive control to handle rapid changes in system dynamics while the indirect adaptive control estimates the plant model to further reduce the tracking error.

4.1.2. Robust Modification

It is well-known that model-reference adaptive control lacks robustness in the presence of small disturbances and unmodeled dynamics [12]. Instability of adaptive laws can be caused by a number of factors such as parameter drift, use of a large adaptive gain, high-frequency inputs, noise, etc [13]. Robust modification schemes are designed to introduce a damping mechanism into the adaptive law in order to ensure that the adaptive parameters remain bounded during the adaptation. Some well-known modification schemes are dead-zone [13], σ-modification [13] and ε-modification [11] which is shown in Eq. (5).

There has been a recent development in new robust modification schemes for model-reference adaptive control. One such robust modification scheme is the optimal control modification which combines optimal control with adaptive control to minimize the L_2-norm of the tracking error with an infinite-time horizon cost function [14]

$$J = \lim_{t \to \to \infty} \frac{1}{2} \int_0^{t_f} (e - \Delta)^{\mathrm{T}} Q (e - \Delta) dt \tag{9}$$

subject to a constraint by the tracking error dynamics

$$\dot{e} = A_m e + B\left(\tilde{W}^{\mathrm{T}} \beta + \varepsilon\right) \tag{10}$$

where $\tilde{W} = W^* - W$ is the variation in the weight matrix.

Using the Pontryagin's Maximum Principle with the Hamiltonian approach, the optimal control modification adaptive law is obtained as

$$\dot{W} = -\Gamma \beta \left(e^{\mathrm{T}} P - \nu \beta^{\mathrm{T}} W B^{\mathrm{T}} P A_m^{-1}\right) B \tag{11}$$

where $\nu > 0$ is a design parameter.

For a second-order model given in Eq. (3), an alternate form of the optimal control modification adaptive law is

$$\dot{W} = -\Gamma \beta \left(e^{\mathrm{T}} P B + \nu \beta^{\mathrm{T}} W K_i^{-2}\right) \tag{12}$$

The optimal control modification adaptive law can be shown by the Lyapunov analysis to be stable and result in uniformly ultimately bounded signals.

The key feature of the optimal control modification is that the damping mechanism in the adaptive law is related to the persistent excitation property of the input signals which is defined as [13]

$$\frac{1}{T_0} \int_t^{t+T_0} \beta\left(x(\tau), z(\tau)\right) \beta^{\mathrm{T}}\left(x(\tau), z(\tau)\right) d\tau \geq \alpha_0 I, \qquad \forall t > 0 \tag{13}$$

In general, a persistent excitation is needed for a parameter convergence. However, large amplitude of a persistently exciting input can adversely affect the stability of a closed-loop adaptive system since it may excite unmodeled dynamics. With the optimal control modification, as the persistent excitation increases, so is the damping mechanism that counteracts the adverse effect of the persistent excitation.

4.1.3. Adaptive Control Metrics

A major feature of adaptive control is nonlinearity. Owing to its nonlinearity, adaptive control systems are inherently more complex than linear time invariant (LTI) control systems. While the certification process for LTI control systems is well established, the same is not true for adaptive systems. There are well-accepted metrics for LTI control systems that quantify performance and stability of these systems such as overshoot, settling time, and phase and gain margins.

<u>Performance Metrics</u>

Transient performance and steady state performance are two important requirements for any control system design. In a LTI control system, classical metrics of overshoot or undershoot are used to bound the exceedance of the transient response of a control system to a specified command. With a large transient response, the system may behave differently from the assumed model or move to a different operating point that could invalidate the control system design. One approach is to define the transient performance metric as a L_∞-norm measure of the overshoot (or undershoot) of an adaptive control system relative to the ideal response of the off-nominal reference model to a specified command. This metric could be expressed as [16]

$$\frac{\left\| x(t) - x_m(t) \right\|_\infty}{\left\| x_m(t) \right\|_\infty} = \frac{\max_{t \in [t_0, t_f]} \left\| x(t) - x_m(t) \right\|}{\max_{t \in [t_0, t_f]} \left\| x_m(t) \right\|} \tag{14}$$

where the metric is normalized from 0 to 1 and the L_∞-norm is evaluated over a time interval from t_0 to t_f which could be the final simulation time or the settling time at which the response of an adaptive system is within a specified tolerance of the reference model.

A steady state performance metric is designed to provide a measure of the time duration for the response of an adaptive control system to reach a specified level of the expected ideal response of the reference model. This is equivalent to the settling time in classical control. One such metric could be defined as a L_2-norm measure as [16]

$$\frac{\left\| x(t) - x_m(t) \right\|_2}{\left\| x_m(t) \right\|_2} = \frac{\sqrt{\int_{t_0}^{t_f} \sum_{i=1}^{n} \left| x_i(t) - x_{m,i}(t) \right|^2 d\tau}}{\sqrt{\int_{t_0}^{t_f} \sum_{i=1}^{n} \left| x_{m,i}(t) \right|^2 d\tau}} \tag{15}$$

The steady state performance metric in Eq. (24) also measures the high frequency response of the adaptive control system relative to the ideal response since an oscillatory signal generally results in a larger L_2-norm.

Stability Metrics

Phase and gain margins can be used as stability metrics in adaptive control systems under some circumstances. One possible use would be when an adaptive control process is terminated by switching off the adaptation, essentially freezing the adaptive parameters, or when the adaptive signal converges to a steady state value. Some methods of approximate phase and gain margin analysis for adaptive control systems have been proposed that could be used without turning off the adaptation. One method for analyzing stability margins is based on a LMI approach by transforming the nonlinear form of adaptive control into a linear parameter varying form [18].

Time delay margin has been viewed as a more readily accepted metric for relative stability of nonlinear control. A current challenge is that there is no well-established analytical tool for computing the time delay margin for an adaptive control system. One proposed method is based on a Pade approximation to transform the time-delay adaptive control system into a higher order

system without the time delay that can be analyzed by the Lyapunov method [19]. This method tends to yield a very conservative estimate of the time delay margin even for a simple scalar adaptive control system [19]. Despite new theoretical methods under development for computing the time delay margin, the most direct way to compute the time delay margin is by simulations.

Bounded linear stability analysis method is a new method that has been developed to compute approximately the time delay margin and hence phase margin of an adaptive control system [20]. The method approximates an adaptive control system for a weakly nonlinear (almost linear) structured uncertainty by a locally bounded LTI control system that can be analyzed using standard LTI analytical tools. The approximation is shown to provide a more accurate estimate of the time delay margin than the Pade approximation approach in [19].

4.2. Integrated Flight-Propulsion Control

As a control actuator, aircraft engines are generally slower than the traditional flight control surface actuators. The response time of a typical aircraft engine can be characterized by the engine lag time and the engine time constant. Since the transient dynamics upon the loss of a vertical stabilizer can be rapid, aircraft engines may not be able to respond quickly to changes in aircraft states to regain aircraft stability and control. In order to integrate aircraft engines into the flight control loop, certain requirements on the engine responsiveness must be met.

4.2.1. Differential Engine Thrust Control with Current Engine Capability

The current engine capability could be used in situations involving less severe damage to the vertical stabilizer-rudder system. With the engines as slow acting actuators operating in conjunction with traditional fast flight control actuators, the differential engine thrust control can be integrated in the inner loop of the flight control system. A technique for dealing with control systems with time-scale separation involving slow acting actuators is the singular perturbation approach [22]. Another approach is based on a predictor model [23].

The general conclusions of these studies indicate limited applicability of state-of-the-art aircraft turbofan engines towards stabilizing an aircraft for large deviations in initial side-slip response after an adverse event pointing to faster engine response requirements.

4.2.2 Fast Engine Response Requirements

Engine dynamics are quite complex and the engine thrust is generally a nonlinear function of altitude and airspeed. The control input to an engine is provided by an engine throttle which is measured by a throttle resolver angle (TRA). At a given altitude and airspeed, engine dynamics may be approximated by time-delayed second-order system as

$$\ddot{T} + 2\zeta\omega_n\dot{T} + \omega_n^2 T = b\delta_T\left(t - t_d\right) \tag{16}$$

where $\zeta = 1$ is the critical damping ratio, ω_n is the frequency bandwidth of the closed-loop engine dynamics, δ_T is the TRA command, and t_d is the engine time lag. The engine time constant is computed as $\tau = 1/\omega_n$. Both the engine time constant and engine lag are functions of

the engine trim thrust, mach number, altitude, and whether the engine accelerates or decelerates. Figure 5 is a typical turbofan engine thrust response curve.

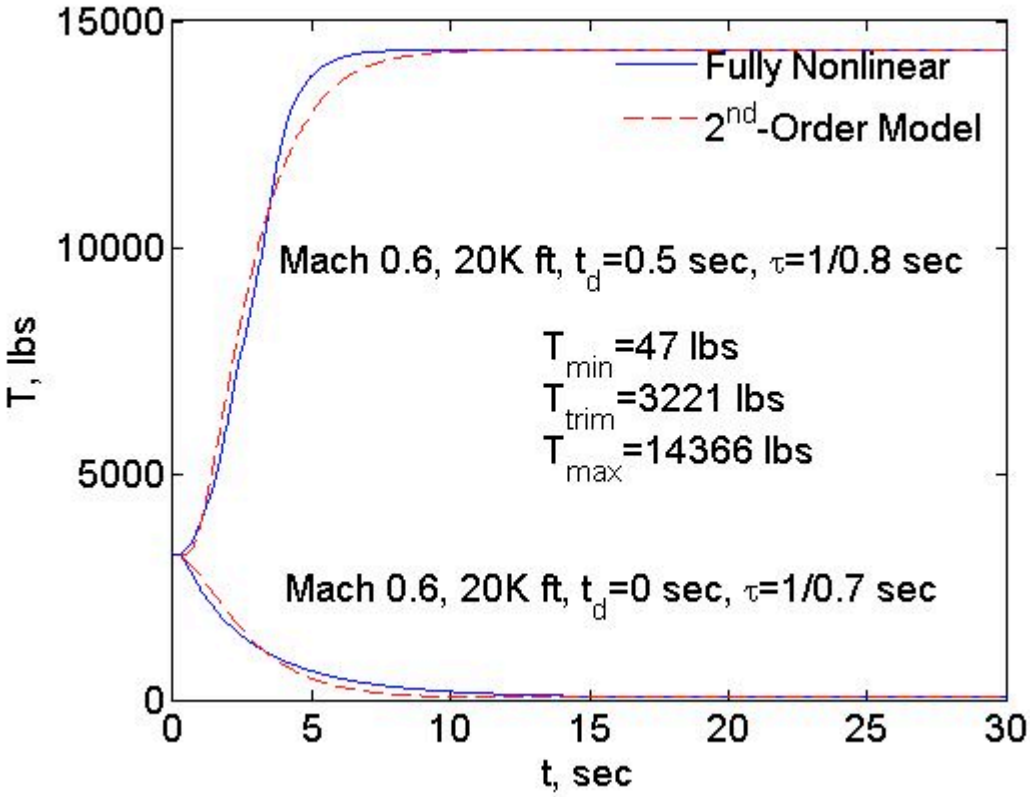

Figure 5 – Typical Aircraft Engine Thrust Response for Step TRA Input

For a twin-engine aircraft, both the engine left and right throttles can be controlled individually to provide a collective thrust to control pitch motion and a differential thrust to control roll and yaw motions. If the yaw damping is severely reduced due to damage to the vertical stabilizer-rudder system, individual engine thrust control can possibly be used for a directional stability augmentation.

The closed-loop system with engine thrust as an attitude feedback controller has a form

$$\dot{x}(t) = A(\tau)x(t) - BKx(t - t_d) \tag{17}$$

The stability of the closed-loop system can be estimated by a matrix measure approach for time-delay systems as

$$\begin{aligned} &\omega < \bar{\mu}(-jA) + \|BK\| \\ &t_d < \frac{1}{\omega}\cos^{-1}\frac{\bar{\mu}(A) + \bar{\mu}(jBK)}{\|BK\|} \end{aligned} \tag{18}$$

where $\bar{\mu}$ is a matrix measure value, A determines the open-loop lateral-directional characteristics and K is the loop gain matrix that gives desired stable closed-loop poles as determined from

$$\det\left(sI - A + BKe^{-j\omega t_d}\right) = 0 \tag{19}$$

To obtain desired closed-loop characteristics, the loop gain matrix K must be large enough to stabilize the close d-loop system in an event of damage to the vertical stabilizer-rudder system. However, a large loop gain can destabilize the closed-loop system in the presence of the engine lag which acts as a time delay. In general, the closed-loop poles can be placed at desired locations by suitably decreasing the engine time constant and engine lag [22].

For a typical transport aircraft, the rudder actuator system typically has a bandwidth in the range from 4 to 6 Hz. This actuator response provides sufficient yaw damping augmentation for a stable Dutch-roll mode. For a worst-case damage to the vertical stabilizer-rudder system that results in an unstable Dutch-roll mode, the bandwidth of the engine will have to come close to the rudder actuator system to provide the required stability properties [22]. In some instances, the engine response might have to be faster than even the rudder actuator system to provide the same desired closed-loop yaw damping. These requirements may be quite demanding and perhaps even unachievable for the current engine design. Alternatively, the requirements can be relaxed by reducing the desired yaw damping characteristics which in turn can adversely affect the aircraft flying qualities.

4.3. Intelligent Guidance and Planning

Intelligent guidance and planning in the presence of adverse events will enable the pilot to concentrate on the manual control of the aircraft down to a safe landing. Generating the plans and the corresponding trajectories require a good knowledge of many factors, such as available flight envelope, availability of compatible runways, and environmental conditions. The next paragraphs outline studies underway to answer the intelligent guidance and planning challenges outlined earlier.

4.3.1. Emergency Planning Technologies

There has been considerable research on automated planning techniques in AI, but much of this work has been limited to problems that are largely discrete in nature – i.e. where there are few continuous variables involved, or where such choices can be discretized. Finding a viable and safe route to the final approach course is more closely related to problems such as 3D robotic path planning. To tackle these problems, a constraint-based search throughout the space of landing sites/runways that are reachable and obey hard constraints associated with aircraft capability have been investigated [25]. For each such possible landing site/runway, a search is conducted for a coarse spatial path to a final approach fix, taking into account weather and terrain obstacles, and aircraft descent and turning capabilities. This path is then used as input to the more detailed trajectory planning algorithms to evaluate path feasibility. Once a feasible plan is found, evaluation of the robustness of the plan with respect to aircraft capabilities and the possibilities of further degradation in capabilities or weather conditions is conducted.

There are several challenges in this approach. First, although it should be relatively easy to evaluate the risk or robustness of a specific plan, it is considerably more difficult to focus the search on finding low risk plans in the first place. This will require the development of heuristics that can guide the search for a landing site, runway and path by assessing risk of an abstract plan – one that is not yet worked out completely. A second problem is that of improving the robustness of a generated plan by improving the path, or by considering and planning for the possibility of additional failures or contingencies. Fundamental research is underway to extend techniques for planning under uncertainty to deal with the continuous variables in this domain, to focus search on finding robust plans, and to further improve the robustness of plans that have been generated [26].

4.3.2. Trajectory planning Algorithms

The flight plans produced by conventional Flight Management Systems are composed of "waypoints", and the "legs" connecting these waypoints. These legs incorporate standard turn rates and predicted climb and descent performance in order to define the lateral and vertical trajectories that are used to guide the aircraft, and to meet the airspeed and altitude constraints that can be placed on various waypoints. However, in cases where the aircraft is unable to meet these constraints, it is left to the pilots to resolve the situation. As a result, intelligent trajectory planning algorithms will be used to (a) accommodate additional constraints such as asymmetric bank angle limits, (b) create specialized legs that are capable of bleeding off excess energy to comply with approach and landing constraints under conditions such as in cases where the aircraft is no longer capable of achieving level flight, (c) assess the performance of the aircraft such as changes in lift/drag characteristics, and (d) re-plan when necessary. Furthermore, when constraints are not achievable, the trajectory planner may request a change either in lateral path or in aircraft configuration. For example, when the aircraft has excessive energy a lateral leg can be extended, a sequence of helical segments can be added, or drag may be increased, by using a combination of speed breaks, flaps or landing gear. If the aircraft has insufficient energy, some lateral legs can be eliminated (assuming such a change is allowed), therefore resulting in a shorter path and a higher energy at a given waypoint.

In cases involving in-flight failures, certain trajectory planning assumptions may no longer be valid. One such assumption is the ability to maintain wings level flight. For example, if an aircraft encounters a nose-up out-of-trim condition, a bank angle may need to be maintained to achieve a stable trim state. For these types of situations, special case extended solvers can be used to generate flyable legs, which can then be used to construct corresponding trajectories down to landing. For example, in the case where an aircraft cannot fly straight, but can control flight path angle, a sequence of spirals can be used to follow a "reference arc" with a radius adjusted to accommodate an integer number of "max-min radius" turning cycles (Figure 6) [27].

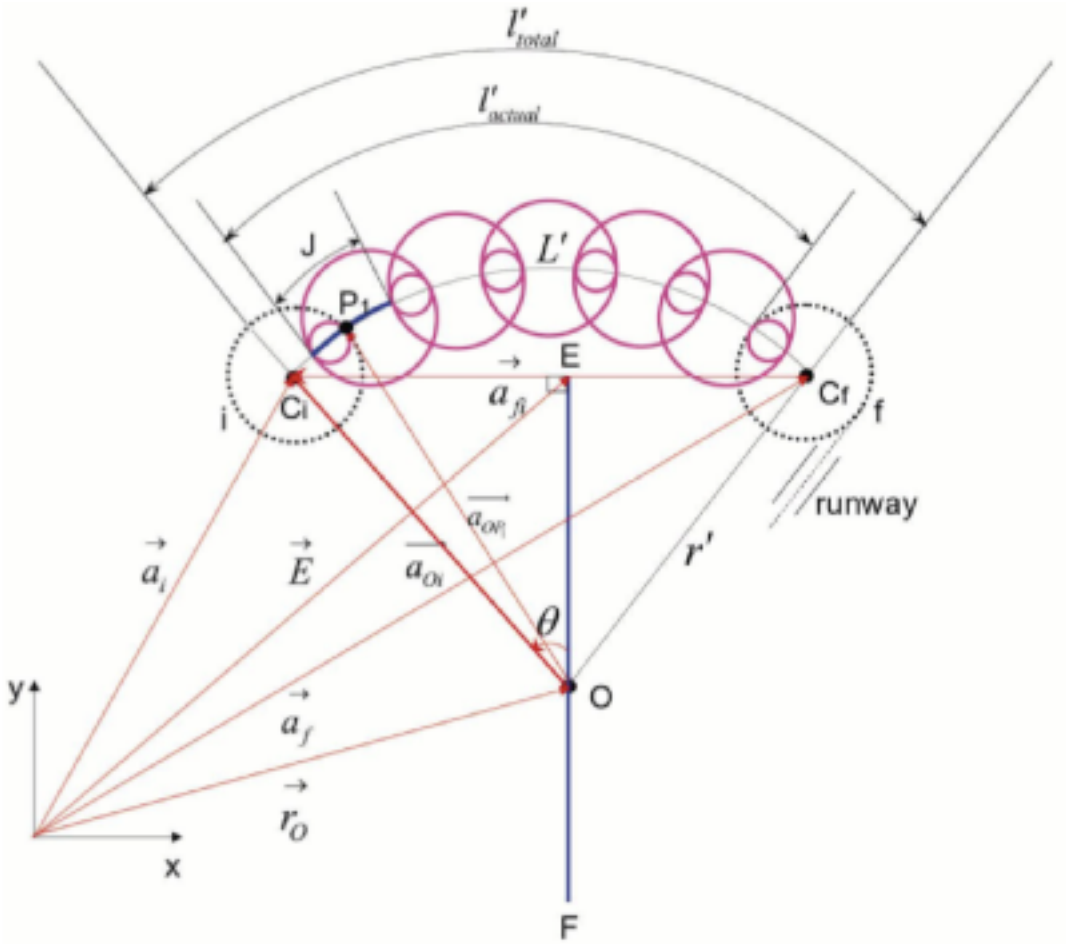

Figure 6 – Precessing a Sequence of Turning Arcs

4.3.3. Adaptive Guidance System

The adaptive guidance system architecture will augment (outer-loop) control gains and rate limits in order to work with the adaptive (inner-loop) control system. This is accomplished by taking advantage of the consistent handling qualities provided by the adaptive control system in terms of natural frequency responses and pitch and roll rate limits.

The adaptive guidance system is also responsible for ensuring that the guidance modes and targets are valid for the known maneuvering envelope. This means that the guidance system will need to ensure that the desired trim state is valid, as well as the transition to that trim state. In some cases, the transition may require a sequence of guidance mode and target transitions [28]. For example, if the aircraft were to encounter a partial loss of one wing, the aircraft may need to increase speed before turning, followed by a deceleration once the turn is complete. In some maneuvers, such as flare, the final aircraft state may not need to be a valid trim state.

In cases where the aircraft may need to fly outside the known maneuvering envelope, the adaptive guidance system may need to explore the boundaries in order to discover additional valid trim states [29]. In this case, the guidance system must navigate within the allowable trim-state region, while also proceeding in the direction of the "unknown" regions of the trim-state

space. To accomplish this, the guidance system must ensure that it proceeds in such a manner that a valid trim state region is verified prior to "taking the next step".

5. SUMMARY

The work presented in this article covers mostly the flight control aspects of resiliency. A successful IRAC study also requires improved models that include system interactions between structures, flight controls and/or the propulsion system. These modeling efforts need to achieve dynamically representative interactions to allow for control law design and evaluation. An example is the need for improved departure and post-departure dynamic modeling of a civil transport class aircraft. Details of the dynamics involved in loss of control are required to better understand how the resilient system can best regain control without further exacerbating the situation. Another example includes the enhancements to propulsion modeling for situations requiring effective integrated flight and propulsion control. In addition to improved modeling, the success of realizing the benefits of the technologies outlined in this article rely on overcoming the barriers of certification of adaptive and intelligent system technologies. One important aspect of this realization is the need for verification and validation (V&V) methods that address the complexity of the IRAC technologies proposed. NASA Aviation safety program is focused both on the modeling aspects as well as the V&V needs for the future of aviation safety.

6. REFERENCES

1. Bosworth, J. and Williams-Hayes, P.S., "Flight Test Results from the NF-15B IFCS Project with Adaptation to a Simulated Stabilator Failure", AIAA-2007-2818, 2007.

2. Rysdyk, R. T. and Calise, A. J., "Fault Tolerant Flight Control via Adaptive Neural Network Augmentation", AIAA-1998-4483, 1998.

3. N. Nguyen, K. Krishnakumar, J. Kaneshige, and P. Nespeca, "Flight Dynamics and Hybrid Adaptive Control of Damaged Aircraft", AIAA Journal of Guidance, Control, and Dynamics, Vol. 31, No. 3, pp. :751-764, 2008.

4. K. S. Narendra and A. M. Annaswamy, *Stable Adaptive Systems*. Englewood Cliffs, NJ: Prentice Hall, 1989.

5. H. Jain, Z. T. Dydek, J. Jang, A. M. Annaswamy, and E. Lavretsky, "Optimal Selection of the Free Design Parameters in an Adaptive Controller," in Proceedings of AIAA Conference on Guidance, Navigation, and Control. Keystone, CO, 2006.

6. National Transportation Safety Board. In-Flight Separation of Vertical Stabilizer American Airlines Flight 587, Airbus Industries A300-605R, N14053 Belle Harbor, New York, November 12, 2001. *NTSB/AAR-04/04*, 2004.

7. No Flight Controls. *Aviation Week and Space Technology*, 159(23):42–43, 2003.

8. F. W. Burcham, T. A. Maine, and J. J. Burken. Using Engine Thrust for Emergency Flight Control: MD-11 and B-747 Results. *NASA/TM-1998-206552*, May 1998.

9. Eberhart, R. L. and Ward, D. G., "Indirect Adaptive Flight Control System Interactions", International Journal of Robust and Nonlinear Control, Vol. 9, pp. 1013-1031, 1999.

10. Cao, C. and Hovakimyan, N., "Design and Analysis of a Novel L1 Adaptive Control Architecture with Guaranteed Transient Performance", IEEE Transactions on Automatic Control, Vol. 53, No. 2, pp. 586-591, 2008.

11. Narendra, K. S. and Annaswamy, A. M., "A New Adaptive Law for Robust Adaptation Without Persistent Excitation", IEEE Transactions on Automatic Control, Vol. AC-32, No. 2, pp. 134-145, 1987.

12. Rohrs, C.E., Valavani, L., Athans, M., and Stein, G., "Robustness of Continuous-Time Adaptive Control Algorithms in the Presence of Unmodeled Dynamics", IEEE Transactions on Automatic Control, Vol AC-30, No. 9, pp. 881-889, 1985.

13. Ioannu, P.A. and Sun, J., *Robust Adaptive Control*, Prentice-Hall, 1996.

14. Nguyen, N., Krishnakumar, K., Boskovic, J., "An Optimal Control Modification to Model-Reference Adaptive Control for Fast Adaptation", AIAA 2008-7283, August 2008.

15. Nguyen, N., and Jacklin, S., "Neural Net Adaptive Flight Control Stability, Verification and Validation Challenges, and Future Research", Workshop on "Applications of Neural Networks in High Assurance Systems", International Joint Conference on Neural Networks, 2007.

16. Stepanyan, V., Krishnakumar, K., Nguyen, N., and Van Eykeren, L., **"**Stability and Performance Metrics for Adaptive Flight Control", AIAA-2009-5965, 2009.

17. Sang, Q. and Tao, G., "Gain Margins of Multivariable MRAC Systems", 47th IEEE Conference on Decision and Control, December 2008.

18. Yang, B.-J. , Yucelen, T. , Calise, A. J. , and Shin, J.-Y., "LMI-based Analysis of Adaptive Controller", American Control Conference, June 2009.

19. Annaswamy, A., Jang, J., and Lavretsky, E., "Stability Margins for Adaptive Controllers in the Presence of Time-Delay", AIAA 2008-6659, August 2008.

20. Nguyen, N., Ishihara, A., Krishnakumar, K., and Bakhtiari-Nejad, M., "Bounded Linear Stability Analysis - A Time Delay Margin Estimation Approach for Adaptive Control", AIAA-2009-5968, 2009.

21. National Transportation Safety Board, "United Airlines Flight 232 McDonnell-Douglas DC-10-10, Sioux Gateway Airport, Sioux City, Iowa, July 19, 1989", NTSB/AAR90-06, 1990.

22. Nguyen, N., Ishihara, A., Stepanyan, V., and Boskovic, J., “Optimal Control Modification for Robust Adaptation of Singularly Perturbed Systems with Slow Actuators”, AIAA Guidance, Navigation, and Control Conference, AIAA-2009-5615, August 2009.

23. Stepanyan, V., Nguyen, N, and Krishnakumar, K., “Adaptive Control of a Transport Aircraft Using Differential Thrust”, AIAA Guidance, Navigation, and Control Conference, AIAA-2009-5741, August 2009.

24. Nguyen, N., “Flight-Propulsion Response Requirements for Directional Stability and Control”, AIAA Infotech@Aerospace Conference, April 2010.

25. Y. Tang, E. M. Atkins, R. M. Sanner, "Emergency Flight Planning for a Generalized Transport Aircraft with Left Wing Damage," Proc. AIAA Guidance, Navigation, and Control Conference, AIAA Hilton Head, SC, August 2007.

26. N. Meuleau, C. Plaunt, D. Smith, “Emergency Landing Planning for Damaged Aircraft”, ICAPS workshop on Planning and Scheduling Applications, July 2008.

27. H. Choi, E. Atkins, “An Analytic Trajectory Planner for Aircraft with Severe Damage or Failures”, AIAA Infotech@Aerospace, April 2009.

28. J. Kaneshige, K. Krishnakumar, “Artificial Immune System Approach for Air Combat Maneuvering”, SPIE-6560, March 2007.

29. G. Yi and E. Atkins, “Trim State Discovery for an Adaptive Flight Planner,” *Aerospace Sciences Meeting,* AIAA, Orlando, FL, Jan 2010.