1998 International Conference on Evolvable Systems

Automated Analog Circuit Synthesis using a Linear Representation

Jason D. Lohn

Silvano P. Colombano

Computational Sciences Division
NASA Ames Research Center
Mountain View, CA, USA

September, 1998

Introduction

Analog circuits are important since the world is fundamentally analog.

Designs that are complex or have tight specs can be difficult and costly to design: can we automatically generate such circuit designs?

We limit our attention to high-level analog design using discrete components (eg R, L, C, BJT) and ignore physical implementation issues.

Previous approaches: heuristics, knowledge-bases, simulated annealing, evolutionary computation (GAs, GP), with GP (Koza et al) likely the most successful.

Introduction

Inspired by the successes of the GP system, we experimented to learn the capabilities of

- a simpler circuit-constructing representation,
- using a standard GA,
- with modest computational resources.

Key properties of our system:

- knows little of circuit design
- components, component sizes and circuit topologies are evolved
- uses a linear and dynamically-sized genome
- fast circuit-construction unfolding process

Circuit Construction

A *cc-bot* is a circuit constructing agent that

- begins building a circuit starting at the input node
- builds a circuit by sequentially placing components and conditionally modifying its position on the circuit.
- is programmed using the following instruction set:

Instruction	*Destination Node*	*CN Register*
x-move-to-new	newly-created node	CN := newly-created node
x-cast-to-previous	previous node	unchanged
x-cast-to-ground	ground node	unchanged
x-cast-to-input	input node	unchanged
x-cast-to-output	output node	unchanged

Linear Representation

The genome is encoded as a linear array of bytecodes, representing a list of circuit-constructing instructions.

- circuit-constructing instruction
- component value

Component values:

- Resistors: scaled sigmoidally to bias towards values below 10K, yet still allow large (100K ohm) values
- Capacitors and Inductors were scaled linearly between 10 pF and 200 μF, and 0.1 mH and 1.5 H, respectively

Properties of cc-bot Technique

Advantages of cc-bot approach:

- no production of non-circuit graphs (danglers, islands, etc.), thus no repair operations needed
- guards against bloated non-coding genome segments
- small circuit-constructing language, fast unfolding

Disadvantages of cc-bot approach:

- does not allow for > 2 terminaled components
- restricted circuit topologies (somewhat biased towards ladder structures)

Problem Setup

GIVEN

a template circuit and parts bins:

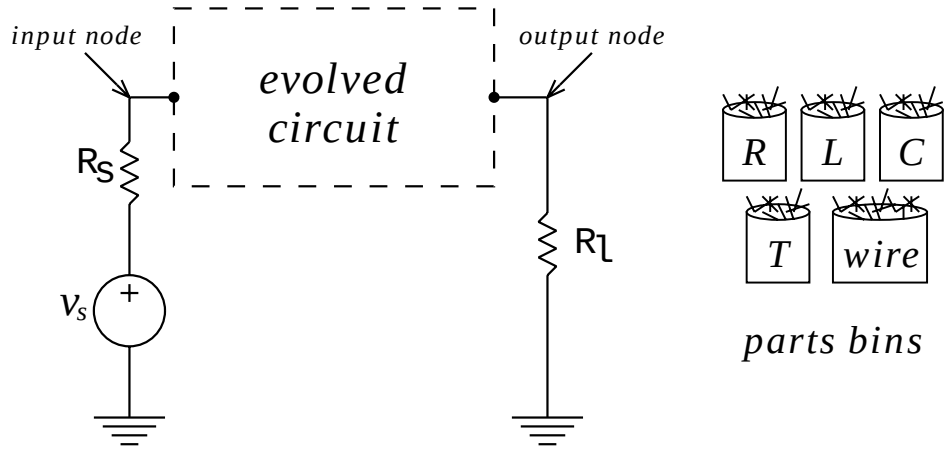

circuit representation and simulation methods:

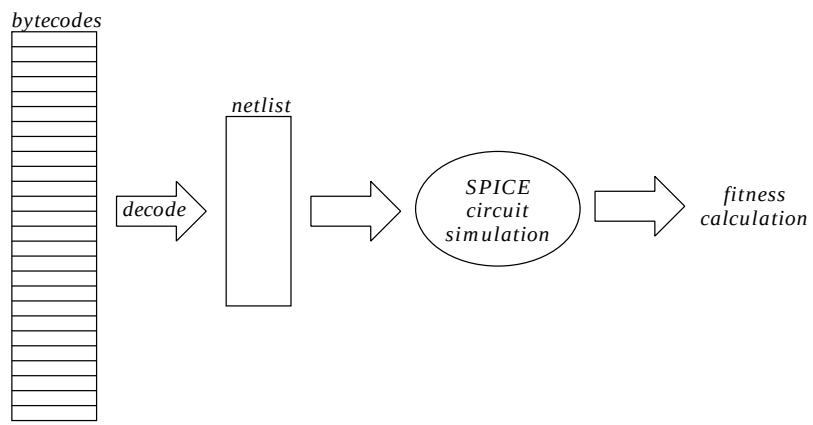

Problem Setup

FIND lowpass filter

a circuit with desirable input/output specs:

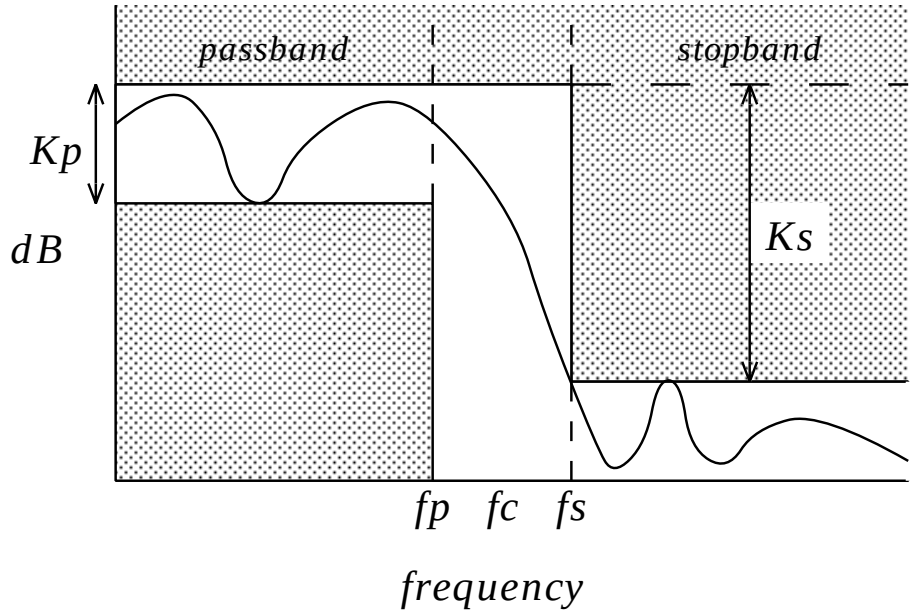

GA parameters: max ckt size = 100 components, pop size = 12K-18K, max gens = 500, xover = 0.8 mut = 0.2

Fitness Function

Fitness calculation:

- computed over 50-100 points (log-scaled frequency)
- absolute value of the difference of the individual's output and the target output
- error values were summed across evaluation points

Parallel Genetic Algorithm

Master/slave parallel GA used since circuit simulations are compute intensive.

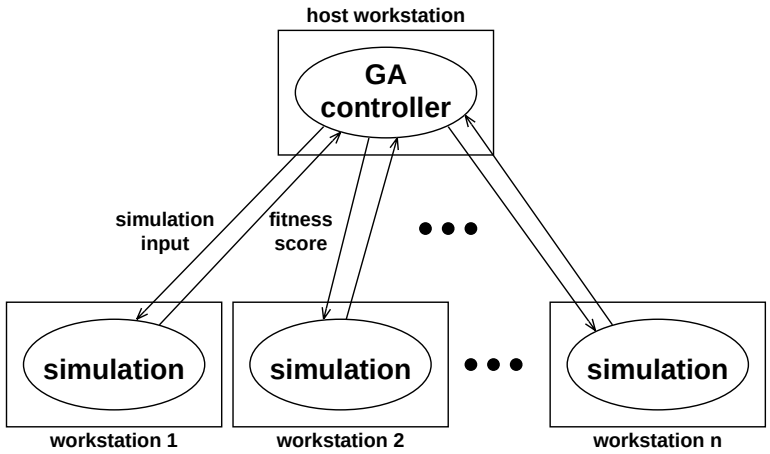

- software can run on parallel supercomputers or any cluster of Unix workstations
- system is generally load-balanced: nearly all worker CPUs are kept busy during the run

Evolved Stethoscope Circuit

Evolved low-pass filter for use in electronic stethoscope:

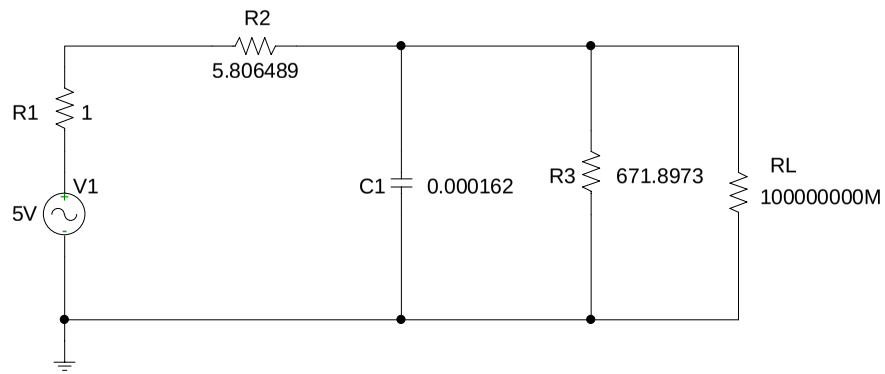

Frequency response:

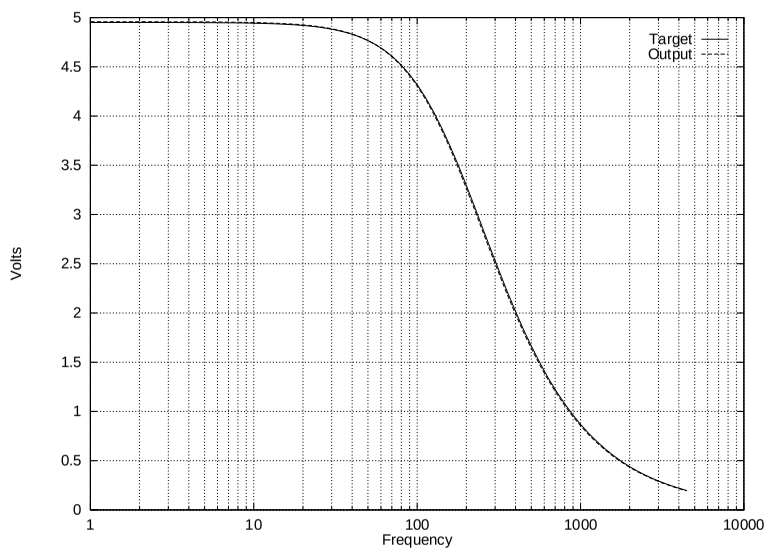

Evolved 3rd-Order Butterworth Lowpass Filter

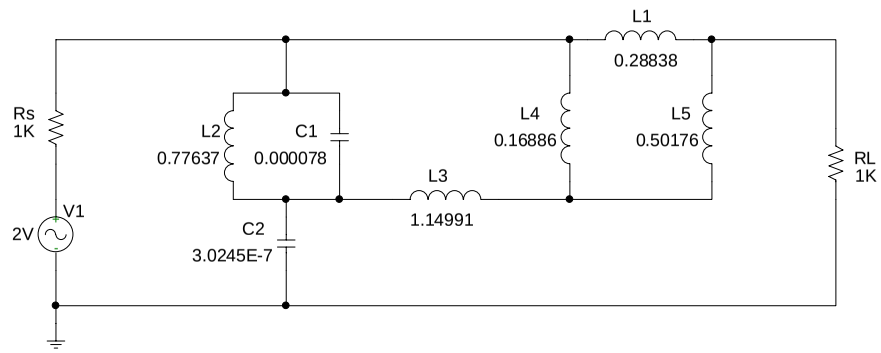

Frequency response:

$f_p = 925$ Hz $\quad K_p = 3.0$ dB

$f_s = 3200$ Hz $\quad K_s = 22.0$ dB

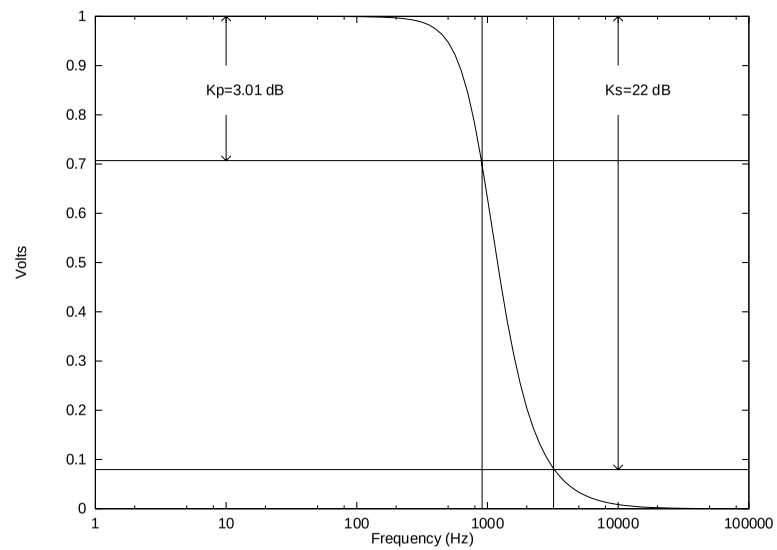

More Difficult Lowpass Filter

Experiment to evolve more difficult low-pass filter:

$f_p = 1000$ Hz and $f_s = 2000$ Hz

Comparison to two other studies:

	Components	K_p (dB)	K_s (dB)
Koza, et al 1996	LC	0.3	60.0
Zebulum, et al, 1998	RLC	1.6	24.8
Lohn, et al, 1998	RLC	0.01	63.5

More Difficult Lowpass Filter

Evolved circuit:

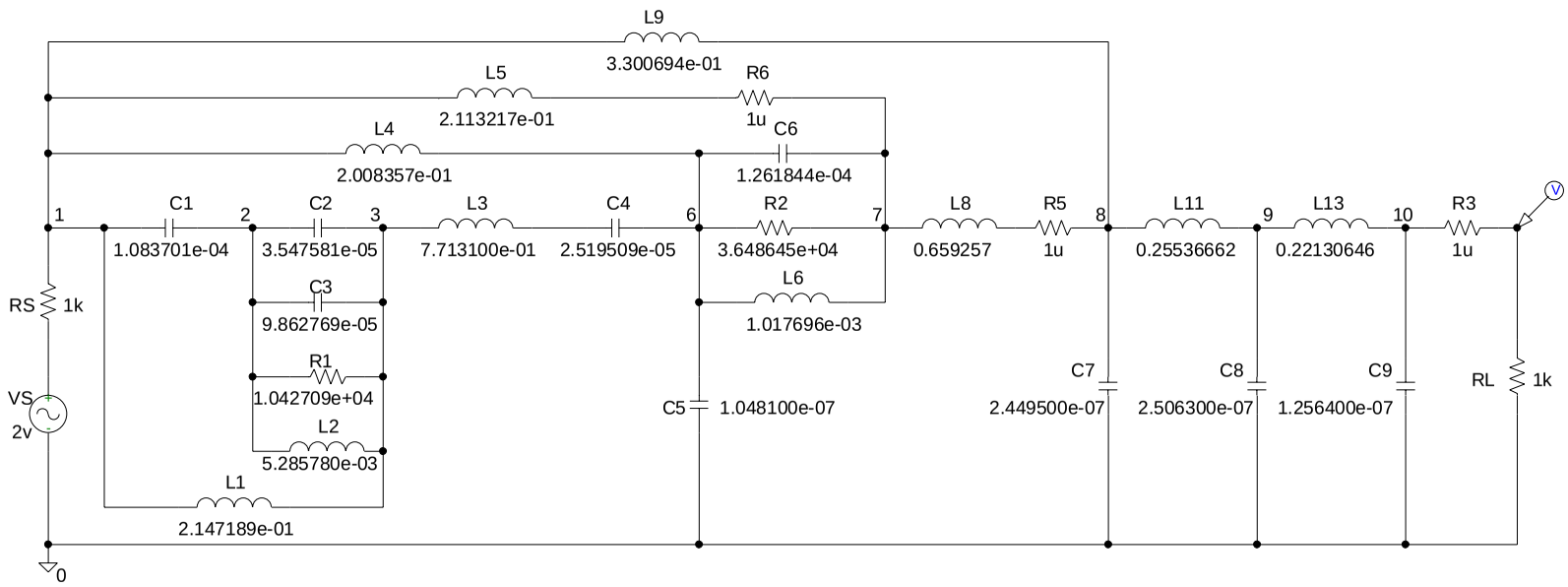

More Difficult Lowpass Filter

Frequency response:

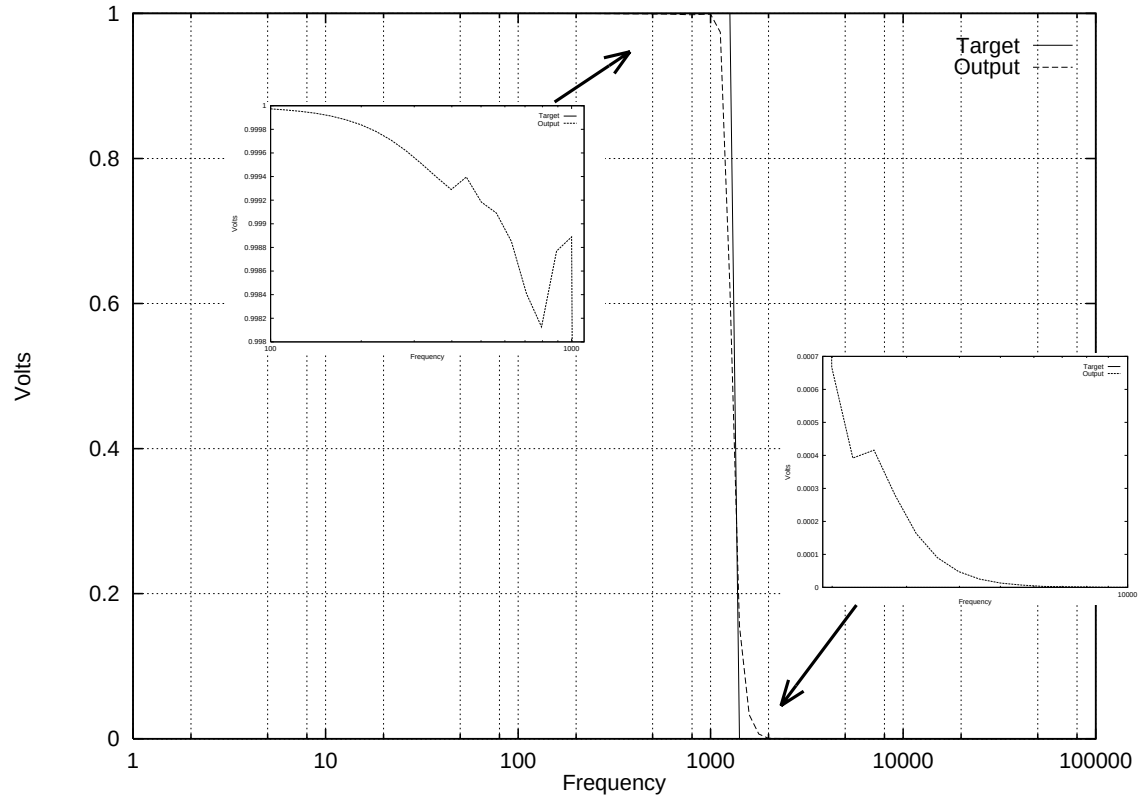

More Difficult Lowpass Filter

cc-bot program:

```
L_CAST_TO_PREV (255 49 35 15)
C_MOVE_TO_NEW (165 92 14 195) C  1  2 10837006
C_MOVE_TO_NEW (54 33 189 181) C  2  3 3547581
C_CAST_TO_PREV (150 126 113 51) C  3  2 9862769
L_CAST_TO_PREV (104 253 199 98) L  3  2 6880711
L_CAST_TO_INPUT (117 2 135 26) L  1  3 7668359
R_CAST_TO_PREV (165 121 81 68) R  3  2 10844497
L_CAST_TO_INPUT (103 172 194 68) L  1  3 6794434
L_CAST_TO_INPUT (166 141 122 8) L  1  3 10915194
L_CAST_TO_INPUT (158 21 3 216) L  1  3 10360067
L_CAST_TO_PREV (0 208 19 230) L  3  2 53267
L_MOVE_TO_NEW (117 177 76 195) L  3  4 7713100
C_MOVE_TO_NEW (54 113 172 195) C  4  5 3568044
C_MOVE_TO_NEW (130 210 156 62) C  5  6 8573596
C_CAST_TO_GND (0 40 241 68) C  0  6 10481
L_CAST_TO_INPUT (166 72 74 188) L  1  6 10897482
L_CAST_TO_INPUT (37 145 161 250) L  1  6 2462113
R_MOVE_TO_NEW (194 169 251 216) R  6  7 12757499
L_CAST_TO_PREV (0 40 19 91) L  7  6 10259
C_CAST_TO_PREV (155 12 129 188) C  7  6 10161281
L_CAST_TO_INPUT (37 107 50 181) L  1  7 2452274
C_CAST_TO_PREV (37 126 70 188) C  7  6 2457158
L_CAST_TO_INPUT (233 55 172 96) L  1  7 15284140
L_CAST_TO_PREV (19 107 108 20) L  7  6 1272684
L_MOVE_TO_NEW (172 171 198 62) L  7  8 11316166
C_CAST_TO_GND (0 95 175 51) C  0  8 24495
L_CAST_TO_PREV (240 253 199 83) L  8  7 15793607
L_CAST_TO_INPUT (50 93 86 110) L  1  8 3300694
L_MOVE_TO_NEW (82 11 90 62) L  8  9 5376858
C_CAST_TO_GND (0 97 231 96) C  0  9 25063
L_CAST_TO_PREV (74 54 50 20) L  9  8 4863538
L_MOVE_TO_NEW (66 151 190 77) L  9 10 4364222
C_CAST_TO_GND (0 49 20 126) C  0 10 12564
L_CAST_TO_PREV (68 130 90 91) L 10  9 4489818
```

More Difficult Lowpass Filter

SPICE Netlist

```
Evolved Lowpass (RLC555)
*** The following circuit was GA-generated
*** Begin netlist
VSOURCE1 256  0  DC 0V  AC 2V
RSOURCE1 256  1  1000
RLOAD001 255  0  1000
CAPC0001    1    2     1.083701e-04
CAPC0002    2    3     3.547581e-05
CAPC0003    3    2     9.862769e-05
RSTR0001    3    2     1.042709e+04
LIND0001    1    3     2.147189e-01
LIND0002    3    2     5.285780e-03
LIND0003    3    4     7.713100e-01
CAPC0004    4    6     2.519509e-05
CAPC0005    0    6     1.048100e-07
LIND0004    1    6     2.008357e-01
RSTR0002    6    7     3.648645e+04
CAPC0006    7    6     1.261844e-04
LIND0005    1    7     2.113217e-01
LIND0006    7    6     1.017696e-03
LIND0007    7    8     1.131617e+00
CAPC0007    0    8     2.449500e-07
LIND0008    8    7     1.579361e+00
LIND0009    1    8     3.300694e-01
LIND0010    8    9     5.376858e-01
CAPC0008    0    9     2.506300e-07
LIND0011    9    8     4.863538e-01
LIND0012    9   10     4.364222e-01
CAPC0009    0   10     1.256400e-07
LIND0013   10    9     4.489818e-01
RSTR0003   10  255     1.000000e-06
*** End netlist
*** Total of   25 components
.AC DEC 20 1 100K
*** Output Stmts: What to print out
*** .PRINT .PLOT
.PRINT AC VM(255)
.OPTIONS NOBREAK NOPAGE NOMOD
.END
```

Conclusion

We have:

- shown that a GA using a simple linear circuit representation is capable of evolving circuits of low to medium difficulty
- introduced a circuit construction method that uses a very simple set of primitives encoded in a linear fashion

Ongoing Work

- allow for greater topologies
- allow three-terminal devices

We are optimistic that a subset of analog circuit design tasks may be routinely accomplished by means of evolutionary computation in the future.